Rev.2 / Date: 14-11-2023

Property of ActionSportGames / ASG

H15 Slim Carbine

003A

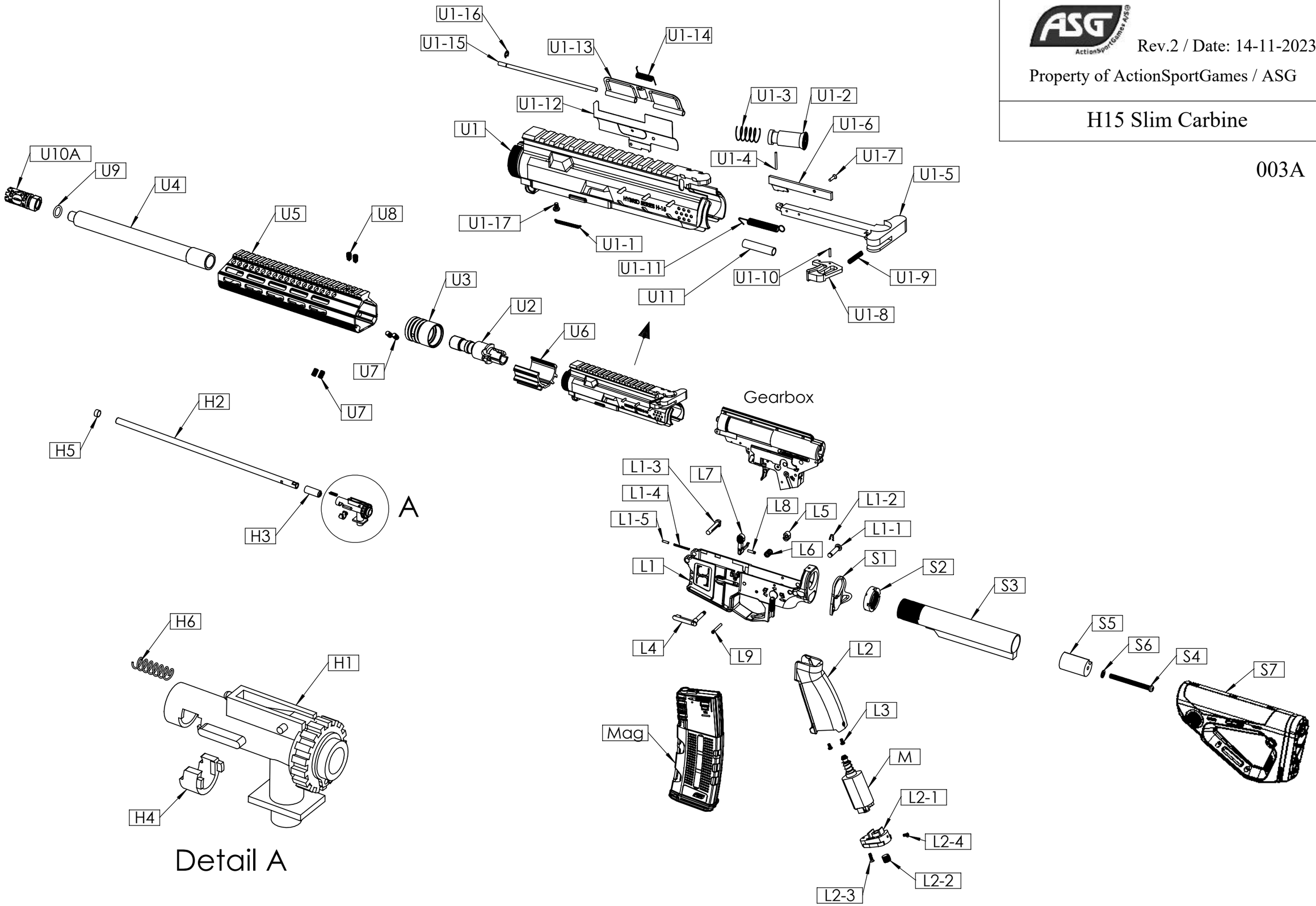

Rev.2 / Date: 14-11-2023

Property of ActionSportGames / ASG

H15-Gearbox Unit

80038

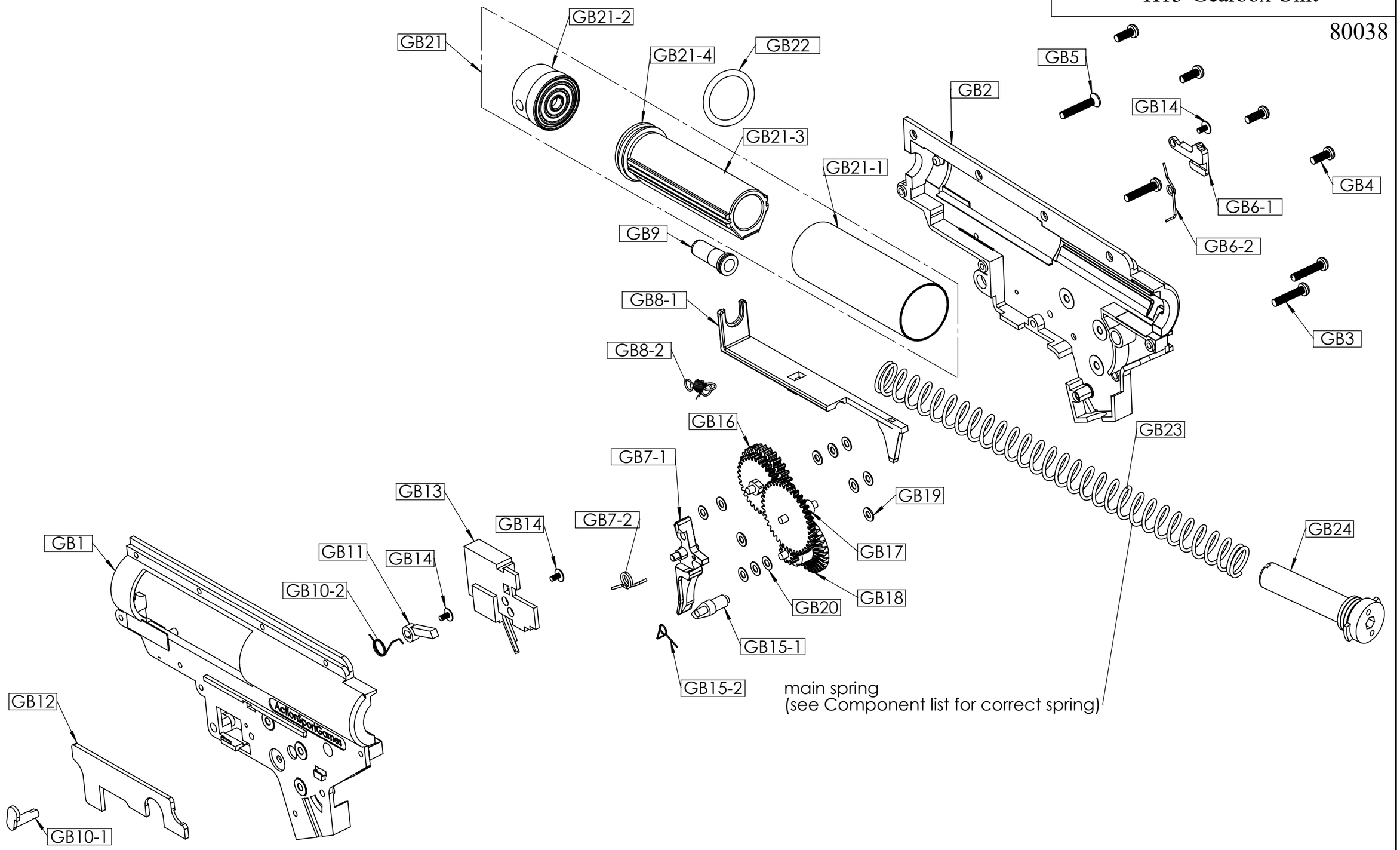

Drawing no.	order no.	Description	
U4	70136	Outer Barrel, long	
H2	70213	Inner Barrel - 310 mm	
U10A	70231	Flash Hider - black	
U1	70194	Upper Receiver	
U2	70183	Outer Barrel Adaptor	
U3	70267	Barrel Nut	
U5	70189	Handguard, Slim Carbine	
U6	70214	Alignment Block, Slim Carbine	
U7	70186	Set Screw M6x10mm, flat	
U8	70272	Set Screw M6x12mm, conical	
U9	18888	O-ring for Flash Hider	
U11	70285	Rubber Sleeve	
L1	70195	Lower Receiver	
L2	70193	Pistol Grip, BLK	
L2-1		Cap	
L2-2		Motor Adjusting Screw	
L2-3		Bottom Screw	
L2-4		Side Screw	
L3	17781	Bolt M3x6 ISO7380-1	
L4	70249	Mag Release	
L5	70250	Mag Release Button	
L6	70251	Mag Release Spring	
L7	70207	Bolt Catch	
L8	70208	Pin ø3x11 (with O-ring)	
L9	70206	Pin ø3x27 (knurled one end)	
GB1	80065	Gearbox Shell - Left	
GB2	80064	Gearbox Shell - Right	
GB3	70197	Gearbox Screw M3, long	
GB4	70198	Gearbox Screw M3, short	
GB5	70196	Gearbox Screw M3, c-sunk	
GB6-1	70201	Bolt Catch Arm	
GB6-2	70202	Spring for Bolt Catch Arm	
GB7-1	70204	Trigger	
GB7-2	70205	Spring for Trigger	
G8-1	70209	Tappet Plate	*
G8-2	70173	Spring for Tappet Plate	
GB9	70217	Nozzle	*
GB10-1	70210	Safety Lever	
GB10-2	70211	Spring for Safety Lever	

Drawing no.	order no.	Description	
GB11	70259	Safety Arm	
GB12	70258	Selector Plate	
GB13	70216	EC Unit (with T-plug)	
GB14	70218	Screw	
GB15-1	70221	Anti-Reversal Latch	*
GB15-2	70222	Spring for Anti-Reversal Latch	
GB16	17716	Gear - Sector	*
GB17	17717	Gear - Spur	*
GB18	17718	Gear - Bevel	*
GB19	17715	Shims 3x6x0,5 mm	
GB20	18048	Shims 3x6x0,3 mm	
GB21	19221	Cylinder/piston unit (1 to 4)	*
GB21-1		Cylinder	
GB21-2		Cylinder Head	
GB21-3		Piston	
GB21-4		Piston Head with O-ring	
GB22	70242	O-ring (can be ordered as replacement)	
GB23	19473	Main Spring M85 (G21-3)	*
GB24	70203	Spring Guide	
M	70220	Motor	*
H1	70223	HopUp Chamber(including arm and button)	
H3	70265	HopUp Rubber	
H4	70252	C-Clip for HopUp Chamber	
H5	70253	Center Ring for HopUp Chamber	
H6	70266	Spring for HopUp Chamber	
Mag	70238	Magazine, H15	
S1		Hook	
S2		Locking Nut	
S3		Buffer Tube	
S4	70085	Bolt M5x65	
S5	70086	Block for Buffer Tube	
S6	70247	Lock Washer for M5 Bolt	
S7	70191	Stock, BLK	

Drawing no.	order no.	Description

* **Ultimate** upgrade parts available for these components

20022 (colour: Black) M85

H15, Slim Carbine

REV2